इंटरनेट मानक

Disclosure to Promote the Right To Information

Whereas the Parliament of India has set out to provide a practical regime of right to information for citizens to secure access to information under the control of public authorities, in order to promote transparency and accountability in the working of every public authority, and whereas the attached publication of the Bureau of Indian Standards is of particular interest to the public, particularly disadvantaged communities and those engaged in the pursuit of education and knowledge, the attached public safety standard is made available to promote the timely dissemination of this information in an accurate manner to the public.

"जानने का अधिकार, जीने का अधिकार"
Mazdoor Kisan Shakti Sangathan
"The Right to Information, The Right to Live"

"पुराने को छोड नये के तरफ"
Jawaharlal Nehru
"Step Out From the Old to the New"

IS 12230 (1987): Sandwich Bread Moulds [FAD 16: Foodgrains, Starches and Ready to Eat Foods]

"ज्ञान से एक नये भारत का निर्माण"
Satyanarayan Gangaram Pitroda
"Invent a New India Using Knowledge"

Act Number 22 of 2005
The Indian Parliament
RIGHT TO INFORMATION

Made Available By
Public.Resource.Org

"ज्ञान एक ऐसा खजाना है जो कभी चुराया नहीं जा सकता है"
Bhartṛhari—Nītiśatakam
"Knowledge is such a treasure which cannot be stolen"

BLANK PAGE

BRUTUM FULMEN

IGNORANTIA JURIS NON EXCUSAT

PROTECTED BY COPYRIGHT

AMENDMENT NO. 1 JANUARY 1990
TO
IS : 12230 - 1987 SPECIFICATION FOR SANDWICH BREAD MOULDS

(*Table* 1, *Sl No.* 1, *last column*) — Substitute '275 ± 1·5' *for* '175 ± 1·5'.

(AFDC 31)

Printed at Printwell Printers, Delhi, India

Indian Standard

SPECIFICATION FOR SANDWICH BREAD MOULDS

Bakery and Confectionery Sectional Committee, AFDC 31; Bakery Equipment Subcommittee, AFDC 31 : 3 [Ref : Doc : AFDC 31 (2449)]

1. Scope — This standard specifies the materials, dimensions and other requirements for sandwich bread moulds.

2. Definitions

2.1 *Sandwich Bread* — A flat top bread, baked in a mould with cover.

3. Materials

3.1 The body of the moulds shall be made from tinplate of minimum 0·54 mm thickness. Tinplate may be hot-dipped or electrolytic type having tin coating mass A 14/14 and E 11·2/11·2 respectively [*see* IS : 1993-1982 Specification for cold-reduced tinplate and cold-reduced blackplate (*second revision*)].

3.2 Galvanized wire of 4·0 mm diameter shall be used for strengthening of top edges.

4. Dimensions — The dimensions for 200, 400 and 800 g loaf moulds shall be as given in Table 1 and Fig. 1.

TABLE 1 DIMENSIONS FOR SANDWICH BREAD MOULD

Sl No.	Characteristic	Dimensions in mm		
		200 g loaf	400 g loaf	800 g loaf
i)	Length			
	L_1	130 ± 1 5	200 ± 1 5	285 ± 1·5
	L_2	120 ± 1·5	190 ± 1·5	175 ± 1·5
ii)	Width			
	W_1	80 ± 1·0	95 ± 1.0	110 ± 1 5
	W_2	70 ± 1·0	85 ± 1·0	100 ± 1 5
iii)	Height	72 ± 1·0	83 ± 1·0	95 ± 1·0

Note — All dimensions are internal dimensions

5. Workmanship and Finish

5.1 Moulds shall be manufactured by rivetting or spot welding. In case of rivetting, heads shall not protrude.

5.2 The moulds shall have a smooth surface and shall be smoothly finished, free from cracks and projections.

6. Lids — Lids shall be made of cold rolled cold annealed (CRCA) sheets or tinplate of 0·54 mm minimum thickness to slide fit on the mould.

7. Packing and Marking

7.1 *Packing* — The sandwich bread moulds shall be packed suitably to prevent damage in transit.

7.2 *Marking* — The sandwich bread moulds shall be indelibly and legibly marked with the following:

a) Manufacturer's name or trade-mark, and

b) Capacity and dimensions of the mould.

Adopted 30 November 1987 | © September 1988, BIS |

BUREAU OF INDIAN STANDARDS
MANAK BHAVAN, 9 BAHADUR SHAH ZAFAR MARG
NEW DELHI 110002

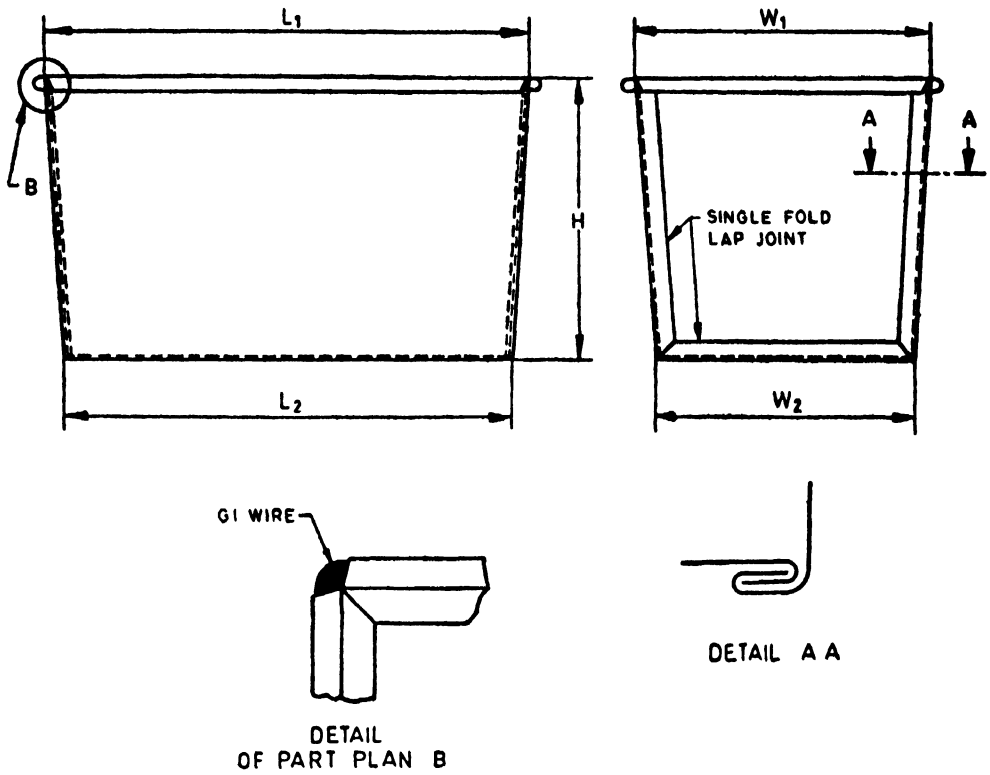

FIG. 1 SCHEMATIC DIAGRAM FOR BREAD MOULD

7.2.1 *Standard Marking* — Details available with the Bureau of Indian Standards.

8, Sampling — The representative samples of the sandwich bread moulds shall be drawn as agreed to between the purchaser and the supplier.

EXPLANATORY NOTE

Sandwich bread moulds of different materials and dimensions are being manufactured in the country. In this standard only tinplate has been specified for use. However, in view of the shortage of tinplate, alternate materials are being investigated, such as utensil or food grade aluminium and its alloys.

For the purpose of deciding whether a particular requirement of this standard is complied with, the final value, observed or calculated, expressing the result of a test or analysis, shall be rounded off in accordance with IS : 2-1960 'Rules for rounded of numerical values (*revised*)'. The number of significant places retained in the rounded off value should be the same as that of the specified value in this standard.

Printed at Printograph, New Delhi, India